Pyramid Coding and Subband Coding

- Predictive pyramids
- Transform pyramids
- Subband coding
- Perfect reconstruction filter banks
- Quadrature mirror filter banks
- Octave band splitting
- Transform coding as a special case of subband coding

from: Girod

Interpolation Error Coding, I

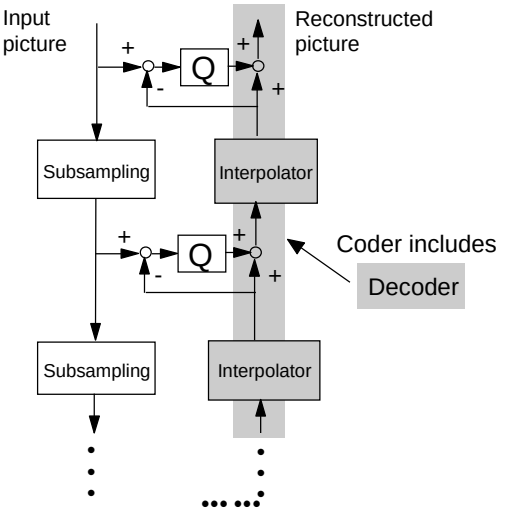

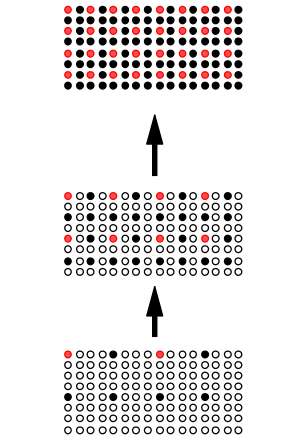

- Sample encoded in current stage
- Previously coded sample

from: Girod

Interpolation Error Coding, II

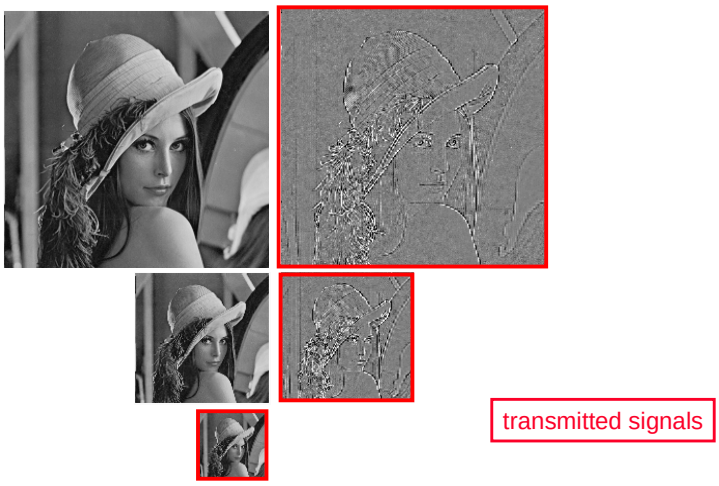

transmitted signals

from: Girod

Predictive Pyramid, I

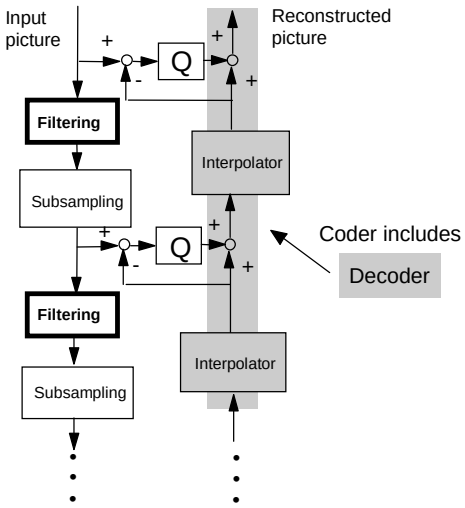

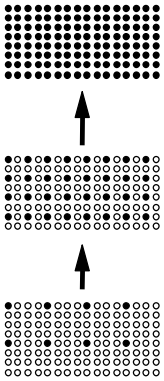

- Sample encoded in current stage

from: Girod

Predictive Pyramid, II

Number of samples to be encoded =

$$\boxed{\left(1+\frac{1}{N}+\frac{1}{N^2}+\ldots\ldots\right)=\frac{N}{N-1}}$$

Subsampling factor

x number of original image samples

from: Girod

Predictive Pyramid, III

transmitted signals

from: Girod

Comparison: Interpolation Error Coding vs. Pyramid, I

- Resolution layer #0 (lowest resolution), interpolated to original size for display

Interpolation Error Coding

Pyramid

from: Girod

Comparison: Interpolation Error Coding vs. Pyramid, II

- Resolution layer #1, interpolated to original size for display

Interpolation Error Coding

Pyramid

from: Girod

Comparison: Interpolation Error Coding vs. Pyramid, III

- Resolution layer #2 ,
  interpolated to original size for display

Interpolation Error Coding

Pyramid

from: Girod

Comparison: Interpolation Error Coding vs. Pyramid, IV

- Resolution layer #3

Interpolation Error Coding

=

(original)

Pyramid

from: Girod

Transform Pyramid Coding

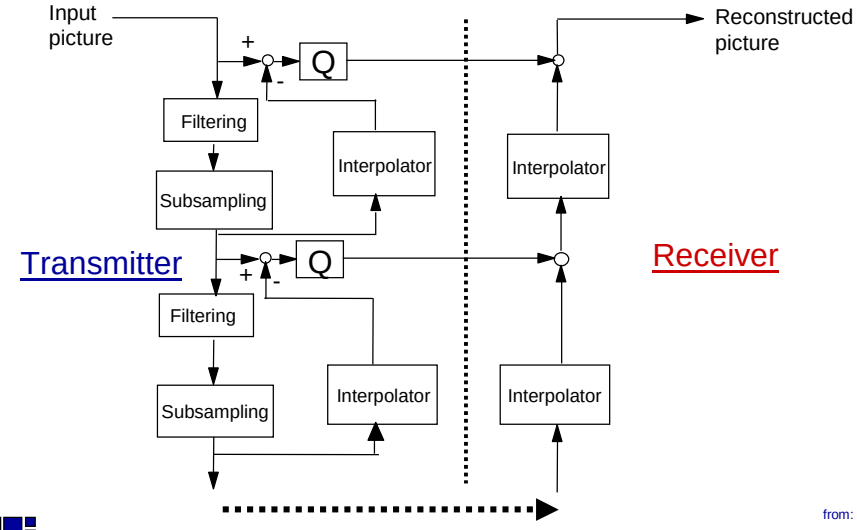

from: Girod

Subband Coding

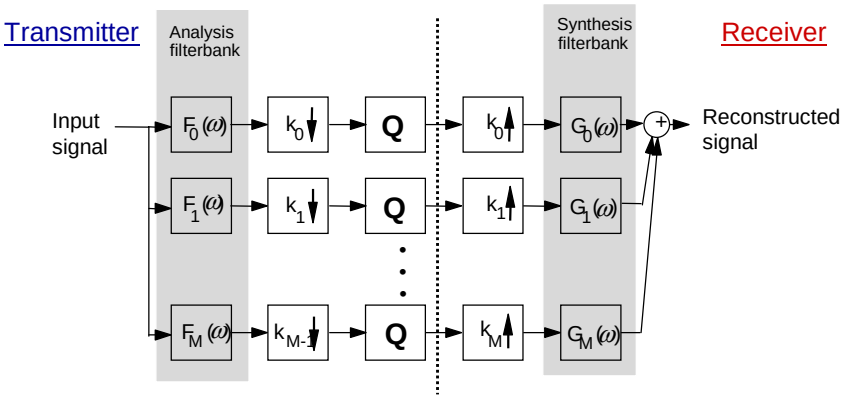

- Number of degrees of freedom is preserved: $\frac{1}{K0}+\frac{1}{K1}+.....+\frac{1}{KM}=1$
- Perfect reconstruction filterbank required

from: Girod

Two-Channel Filterbank

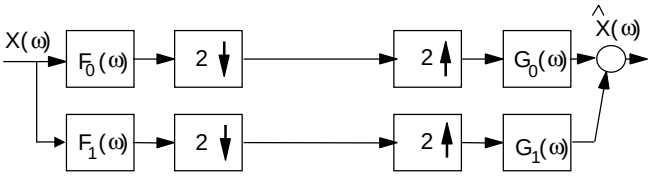

$$\hat{X}(\omega) = \frac{1}{2}\,[F_0(\omega)\,G_0(\omega) + F_1(\omega)\,G_1(\omega)]\;X(\omega)$$
$$+\frac{1}{2}\,[F_0(\omega+\pi)\,G_0(\omega) + F_1(\omega+\pi)\,G_1(\omega)]\;X(\omega+\pi)$$

Aliasing

- Aliasing cancellation if :

$$G_0(\omega) = F_1(\omega+\pi)$$
$$-G_1(\omega) = F_0(\omega+\pi)$$

from: Girod

Example : Two-Channel Filterbank with Perfect Reconstruction

- Analysis filter impulse responses:
  - Lowpass band $\frac{1}{4}(-1,+2,+6,+2,-1)$
  - Highpass band $\frac{1}{4}(+1,-2,+1)$
- Synthesis filter impulse responses:
  - Lowpass band: $\frac{1}{4}(+1,+2,+1)$
  - Highpass band: $\frac{1}{4}(+1,+2,-6,+2,+1)$

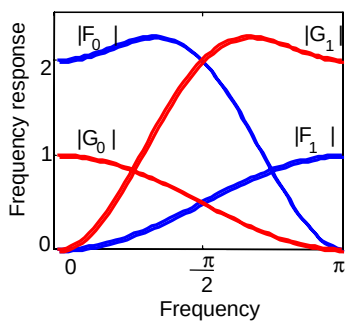

from: Girod

Quadrature Mirror Filters (QMF)

- QMFs achieve aliasing cancellation by choosing

$$F_1(\omega)=F_0(\omega+\pi)$$
$$=-G_1(\omega)=G_0(\omega+\pi)$$

- Highpass band is the mirror image of the lowpass band in the frequency domain

Example:
16-tap QMF filterbank:

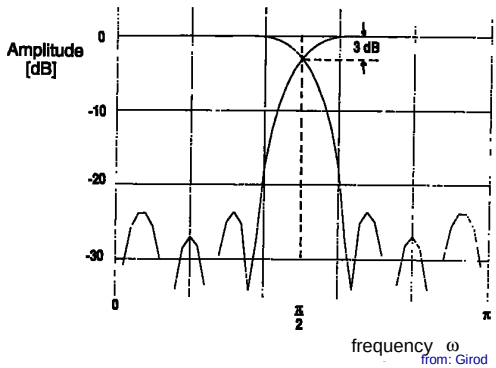

from: Girod

Cascaded Analysis / Synthesis Filterbanks

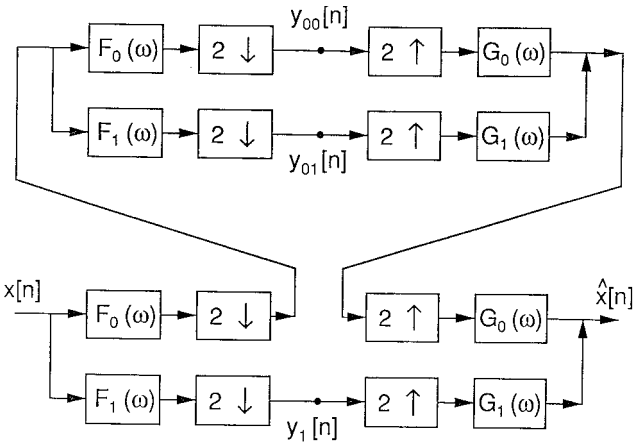

from: Girod

Octave Band Splitting

- Recursive application of a two-band filter bank to the lowpass band of the previous stage yields octave band splitting:

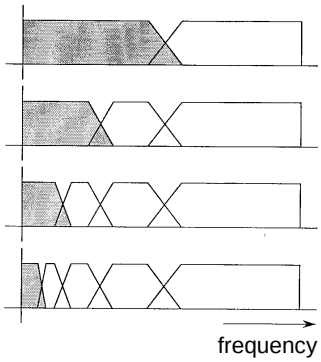

- Same concept, but derived from wavelet theory: <u>dyadic wavelet decomposition</u>

from: Girod

Separable 2D Filterbank, I

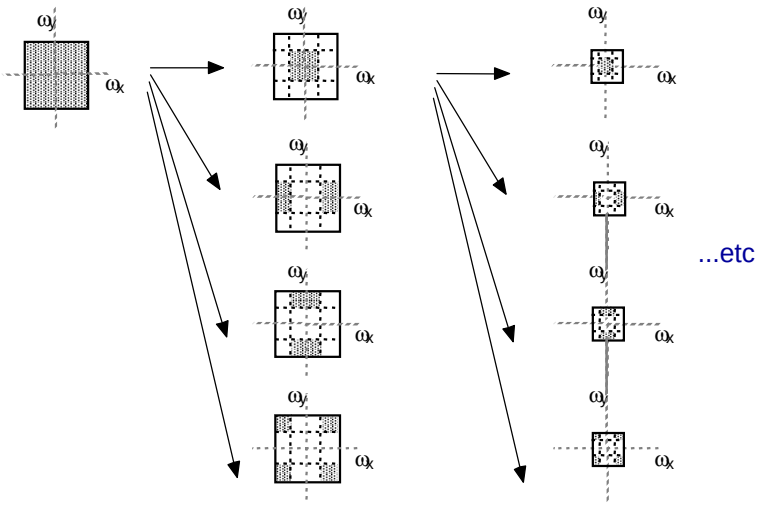

from: Girod

Separable 2D Filterbank, II

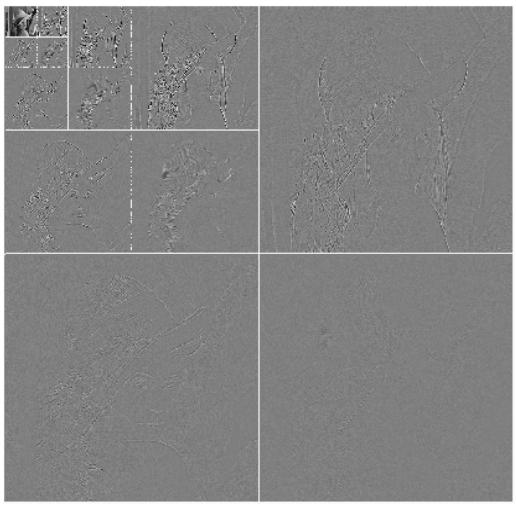

from: Girod

Subband Coding vs. Transform Coding, I

- Transform coding is a special case of subband coding with:

  - Number of bands = order of transform N
  - Subsampling factor $K = N$
  - Length of impulse responses of analysis/synthesis filters $\leq N$

- Filters used in subband coders are **<u>not</u>** in general orthogonal.

from: Girod

Subband Coding vs. Transform Coding, II

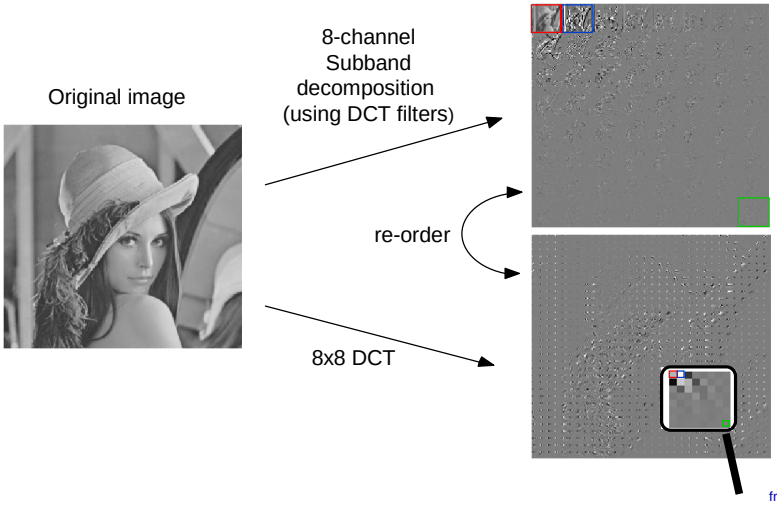

from: Girod

Summary: Pyramid Coding and Subband Coding

- Resolution pyramids with subsampling 2:1 horizontally and vertically
- Predictive pyramids: quantization error feedback („closed loop“)
- Transform pyramids: no quantization error feedback („open loop“)
- Pyramids: overcomplete representation of the image
- Application of pyramids: coarse-to-fine transmission, unequal error protection of resolution layers
- Subband coding: number of samples not increased
- Quadrature mirror filters: aliasing cancellation
- Transform coding is subband coding with non-overlapping impulse responses

from: Girod