Digital Image Communication

Thomas Wiegand

Course at Technical University of Berlin
WS 2000/2001

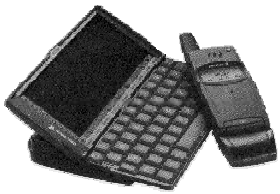

Contact:
Dr.-Ing. Thomas Wiegand
Image Processing Department
Heinrich Hertz Institute
Einsteinufer 37, 10587 Berlin

E-mail: wiegand@hhi.de
URL: http://bs.hhi.de/~wiegand
Tel: 030 - 31002 617
Fax: 030 - 392 72 00

Picture: “Hotel“, 720x576, 414,720 Byte

from: Blättermann

JPEG-2000 Compressed to 12,960 Byte

JPEG-2000 Compressed to 3,240 Byte

Geometric Interpretation

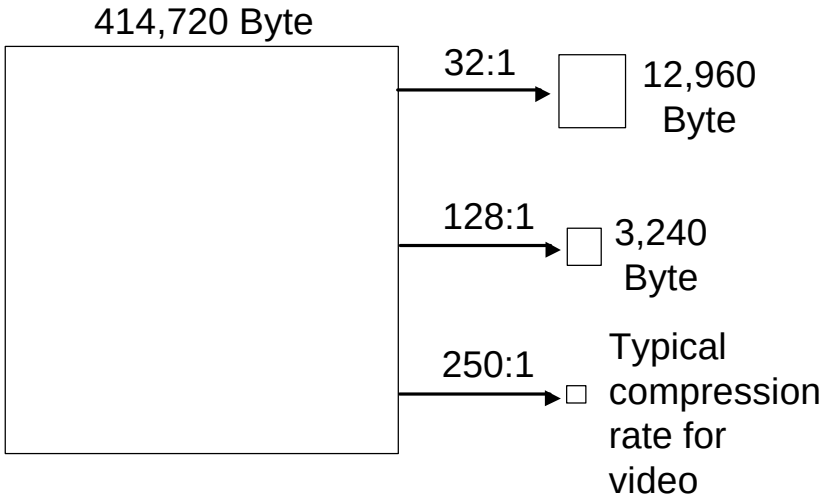

Nipkow Disk

Paul Nipkow: “Elektrisches Teleskop”,
German Patent 1884.

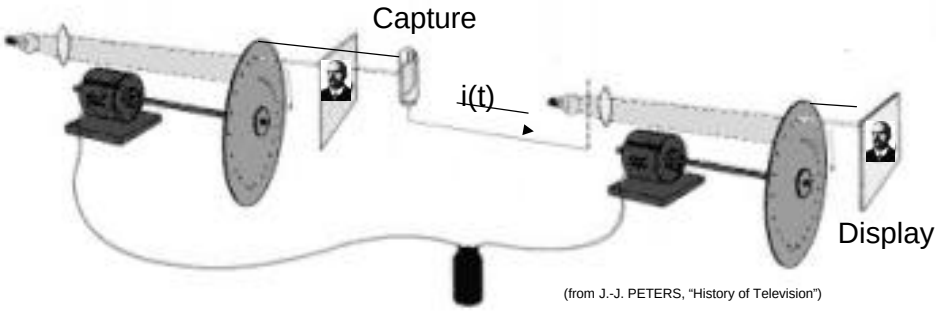

(from J.-J. PETERS, “History of Television”)

Image Transmission by Line Scanning

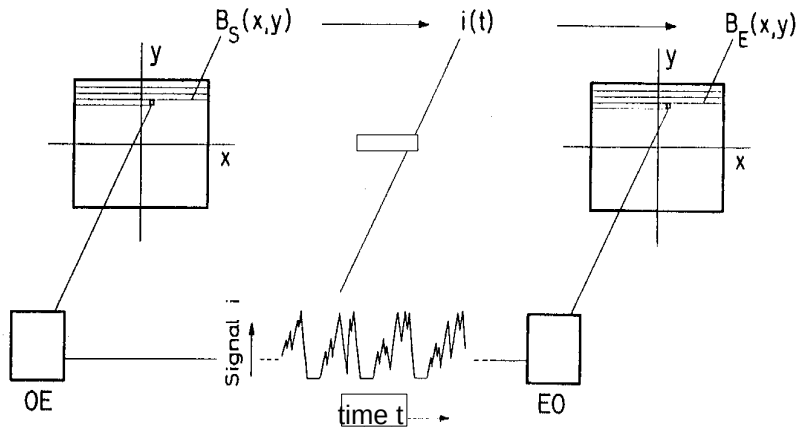

from: Theile

The Image Matrix

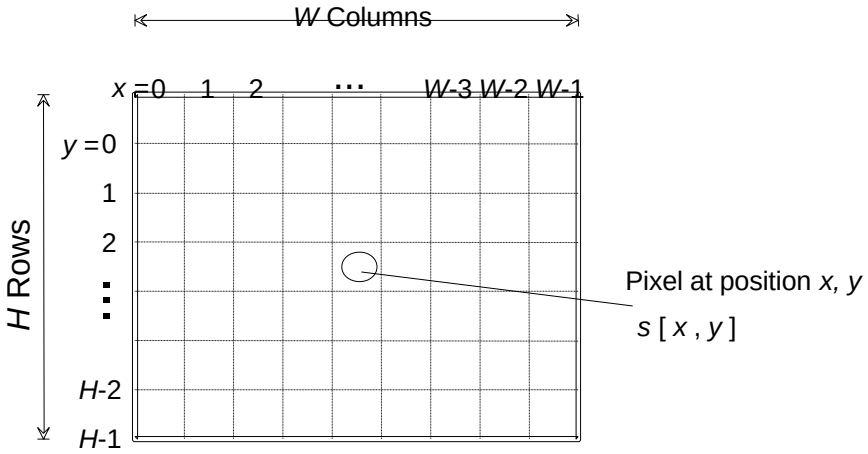

from: Ohm

Digital Image Formats I

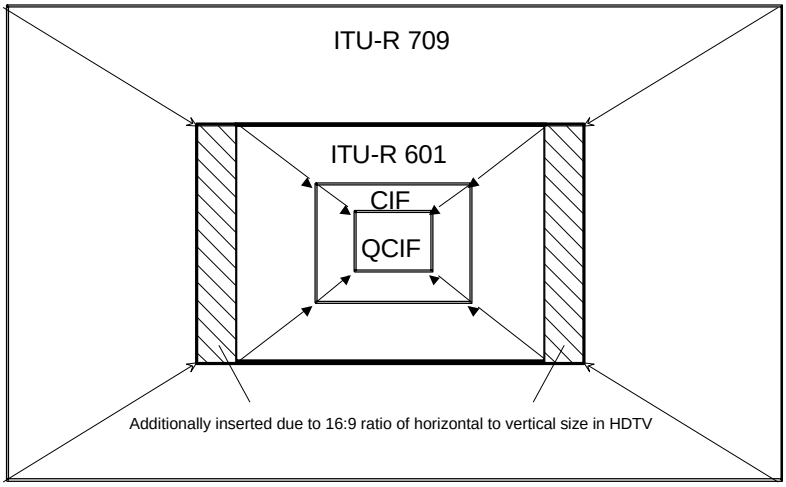

from: Ohm

Digital Image Formats II

	QCIF	*CIF*	*ITU-R 601*	*ITU-R 709*
Pixel / row (*Y*)	176	352	720	1920
Number of rows (*Y*)	144	288	576 (480)	1080
Pixel / row (*U,V*)	88	176	360	960
Number of rows (*U,V*)	72	144	576 (480)	1080
Aspect ratio	4:3	4:3	4:3	16:9
Pictures per second [*Hz*]	5-15	10-30	25 (30)	25 (30)
Bits per picture [*kbyte*] bei 8Bit-PCM	38,02	152,1	829,4 (691,2)	4.424 (3.686)
Bit-rate for image sequence [*Mb/s*]	0,84 - 3,8	10,1 - 30,4	165,9	884,7

Digital Image Formats and Applications

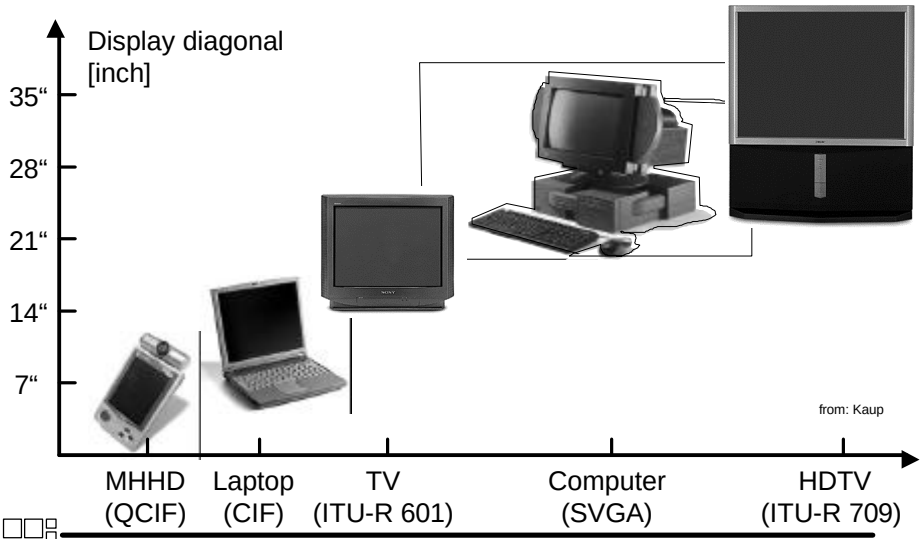

Examples for Storage Media

Media	Capacity	Number of pictures that can be stored in uncompressed format			
		QCIF	CIF	CCIR-601	CCIR-709
Floppy Disk	1.44 Mbyte	37.8	9.5	1.7	0.3
Zip Disk	100 Mbyte	2623	659	118	21
Jaz Disk	1 Gbyte	26230	6590	1180	210
CD-ROM	650 Mbyte	17050	4283	767	136
DVD	4.7 Gbyte	123281	30973	5546	987
Flash	1-100 Mbyte	26-2623	7-659	1-118	0.2-21

Examples for Transmission Media

Media	Bit-Rate	Number of pictures that can be transmitted per second in uncompressed format			
		QCIF	CIF	CCIR-601	CCIR-709
Voice Modem	33.4 kb/s	0.11	0.03	0.005	0.001
ISDN	64 kb/s	0.21	0.05	0.010	0.002
T1 (24xISDN)	1.544 Mb/s	5.1	1.3	0.2	0.04
Ethernet	10 Mb/s	32.9	8.2	1.5	0.28
FDDI	100 Mb/s	328.7	82.2	15.1	2.83
GSM	15 kb/s	0.05	0.01	0.002	0.0004
UMTS	384 kb/s	1.3	0.32	0.06	0.01

Transmission System

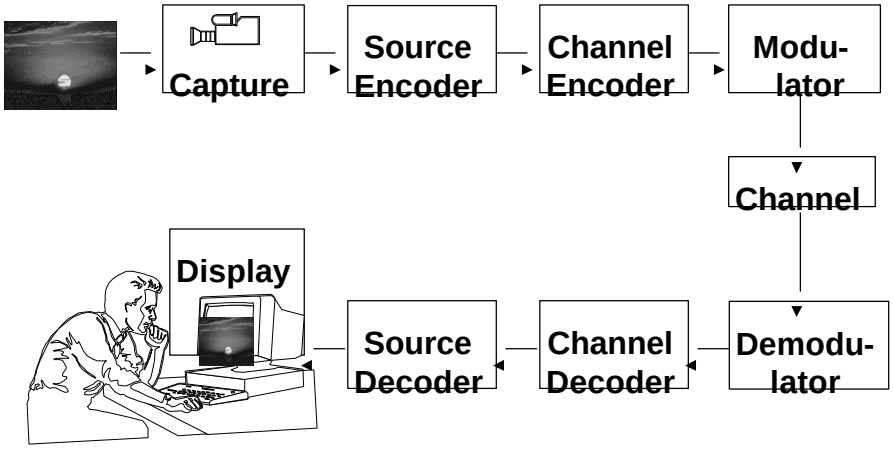

Optimum Scenario

Minimize costs of the complete transmission system, such that the visual information is perceived by the human observer with the desired quality.

Problems:
- Desired accuracy differs for the various applications
- Different applications permit different costs
- Transmission system is interferred by others
- Horizontal integration: design system components seperately (How about storage applications ?)
- How can we measure perceived quality ?

Why Digital Image Communication ?

- Separation of source coding and channel coding allows independent adaptation to the
  - Properties of information source and sink
  - Properties of the transmission channel

- Digital circuitry allows very large scale integration and low manufacturing costs

- Today, signals are stored and transmitted over digital media

The Human Visual System (HVS)

- Resolution limits:
  - Textures with frequencies higher than the limit of the HVS are not recognizable
  - Resolution limits for color are much lower than for luminance
  - Resolution limits are higher for horizontal and vertical structures than for diagonal structures
  - Still objects are recognized much sharper than moving objects
  - Temporal resolution limit of the eye: flicker
- Contrast recognition at edges:
  - Contrast changes at edges are enhanced
  - The HVS is especially sensitive to edges
- Seeing:
  - Combining color, motion, and depth into a collection of interferences about the world
  - Regions of interest in images and videos (various dependencies)

Scope of this Lecture

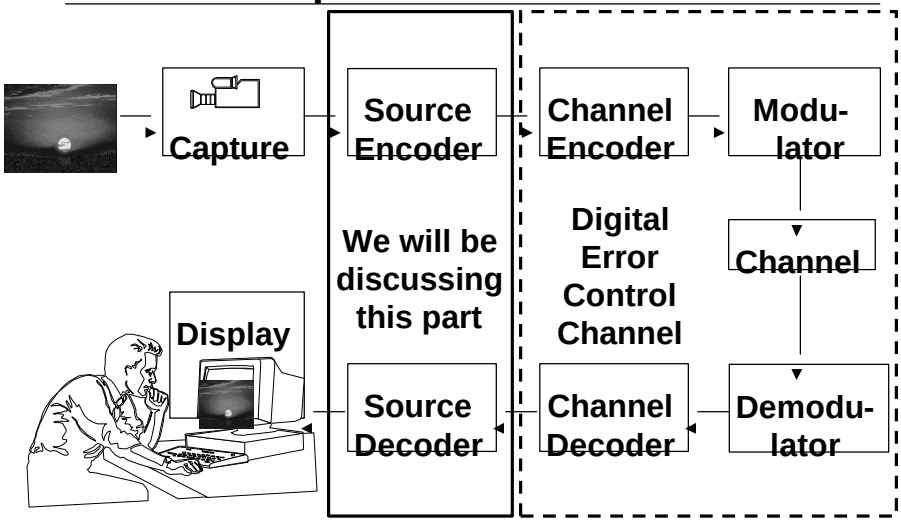

Digital Image Communication

- Information and entropy
- Rate-distortion theory and quantization
- Predictive coding
- Transform coding
- Resolution pyramids and subband coding
- Interframe coding
- Motion estimation
- Motion compensated coding
- Image coding standards JPEG, JPEG-2000
- Video coding standards H.261, H.263, and MPEG-2
- Video processing standards MPEG-4 and MPEG-7
- Laboratory Excursion (HHI)

Organisation

Lecture: Monday 14:00-16:00, room EMH25

Lecturer: Dr.-Ing. Thomas Wiegand
Head of Image Coding and Transmission Group
Image Processing Department
Heinrich Hertz Institute Berlin
wiegand@hhi.de
http://bs.hhi.de/~wiegand

Copies of transparencies can be downloaded at URL:
http://bs.hhi.de/~wiegand/DIC.html

Literature I

Image Processing Basics
• A.K. Jain, "Fundamentals of Digital Image Processing", Prentice-Hall, 1989.
• W. K. Pratt, "Digital Image Processing," New York: Wiley 1978.

Human Visual System
• B. A. Wandell, “Foundations of Vision”, Sinauer Associates, Sunderland, 1995.
• G. Hauske, “Systemtheorie der visuellen Wahrnehmung”, B. G. Teubner Stuttgart, 1994 (in German).

Information Theory
• C. E. Shannon, “A Mathematical Theory of Communication”, Bell System Technical Journal, Vol. 27, pp. 379-423 (Part I), pp. 623-656 (Part II), 1948.
• T. M. Cover, J. A. Thomas, “Elements of Information Theory”, John Wiley & Sons, New York, 1991.

Literature II

Rate-Distortion Theory & Quantization
• T. Berger : “Rate Distortion Theory,“ Prentice-Hall, 1970
• N. S. Jayant, P. Noll : “Digital Coding of Waveforms,“ Prentice-Hall, 1984
• A. Gersho, R. M. Gray : "Vector Quantization and Signal Compression,“ Kluwer, 1992

Image Coding
• Vetterli, J. Kovacevic : “Wavelets and Subband Coding,“ Prentice-Hall, 1995
• W. Pennebaker, J. Mitchell, "JPEG Still Image Data Compression Standard", Van Nostrand Reinhold, New York, 1993.
• J.-R. Ohm, “Digitale Bildcodierung”, Springer, 1995 (in German).

Journals
• IEEE Transactions on Image Processing
• IEEE Transactions on Circuits and Systems for Video Technology
• IEEE Signal Processing Magazine
• IEEE Communications Magazine